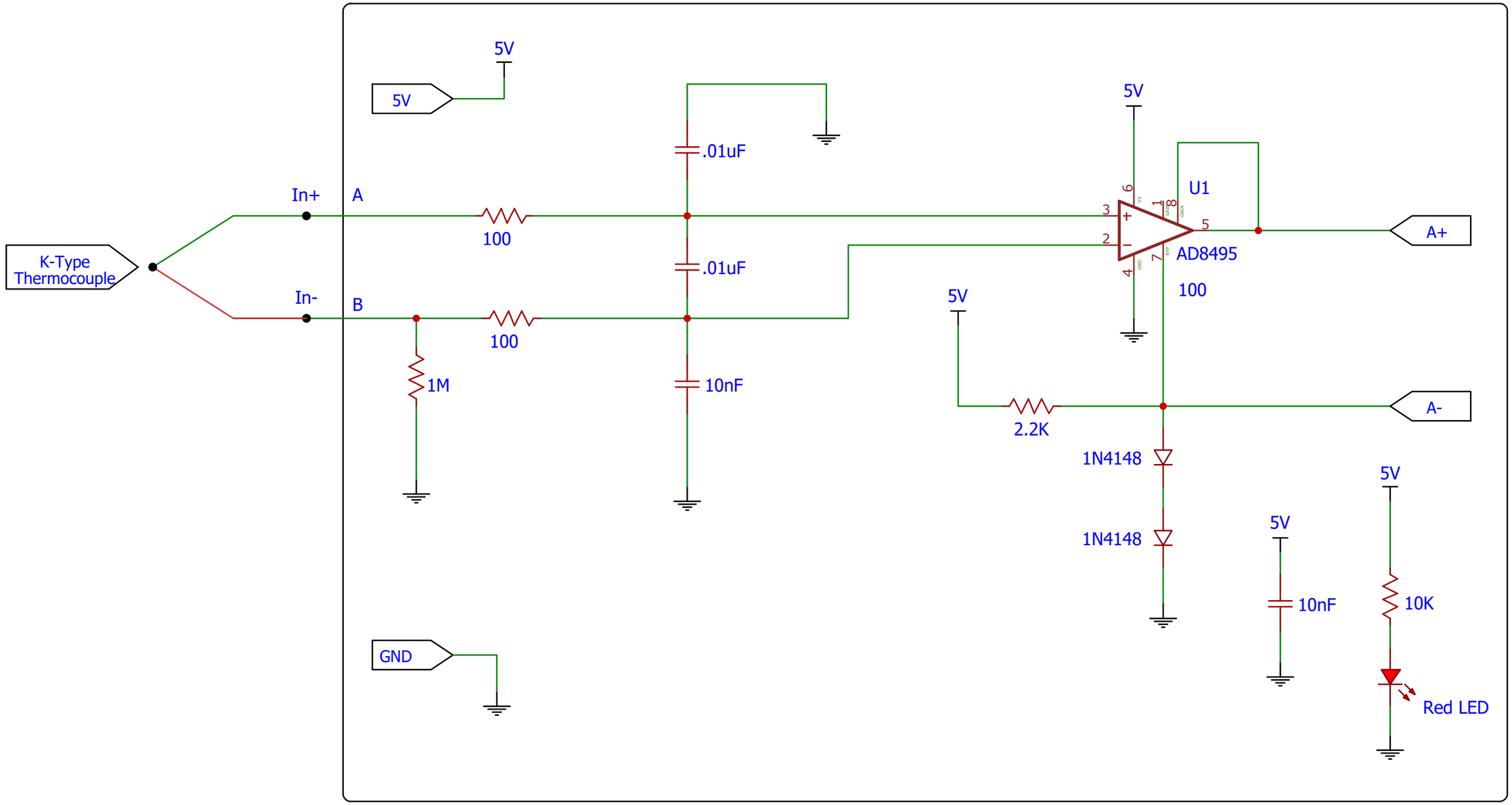
5V
5V
.01uF
5V
U1
In+
A
100
K-Type
Thermocouple
.01uF
AD8495
A+
In-
B
100
5V
100
1M
10nF
A-
2.2K
1N4148
5V
1N4148
5V
10nF
10K
GND
Red LED